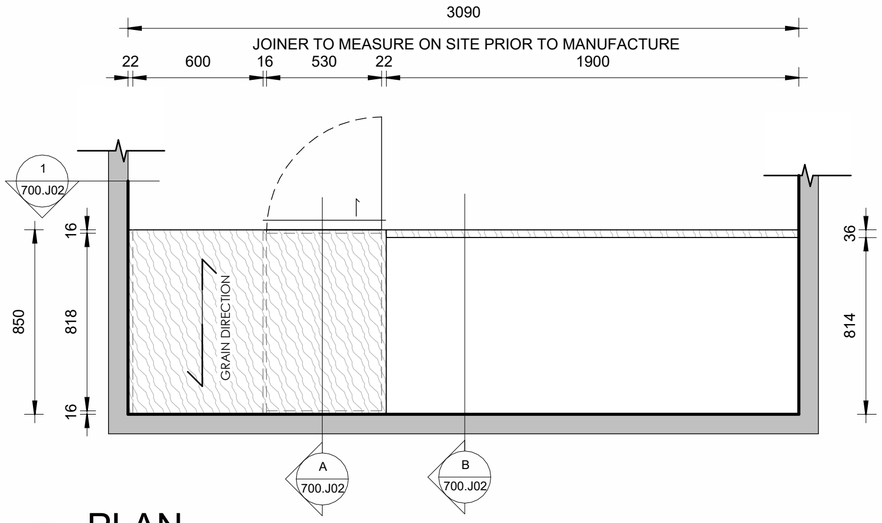

J2 PLAN
1 : 20

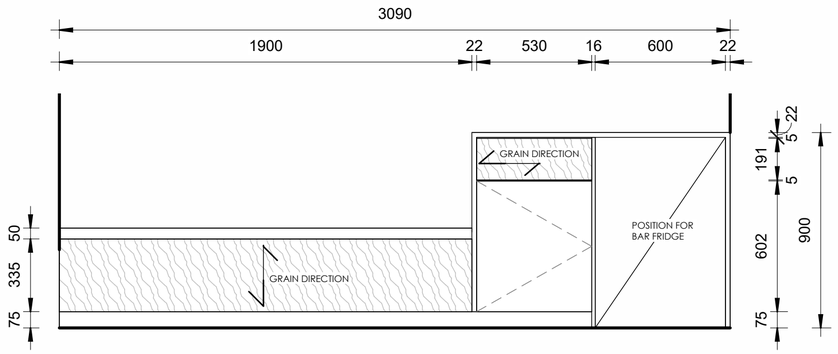

1 ELEVATION 1- FRONT
1 : 20

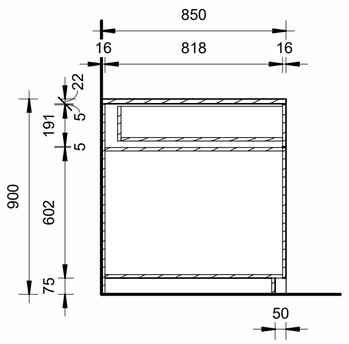

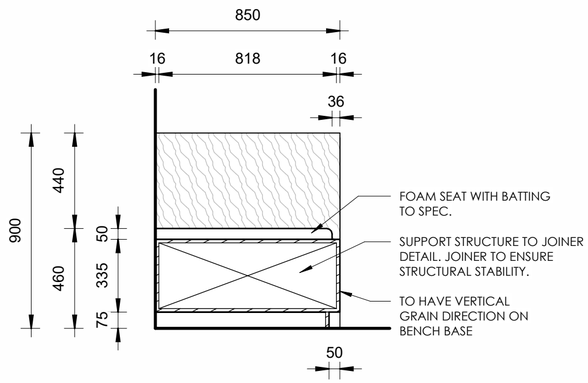

A SECTION A
1 : 20

B SECTION B
1 : 20

3D 3D VIEW

QUANTITY
J02: X 1

GENERAL NOTES:
- SHOPFITTER TO CHECK DELIVERY ROUTES ON SITE BEFORE MANUFACTURING AND DELIVERIES TAKES PLACE.
- LANDLORD AND CLIENT TO ADVISE ON TIMES WHEN DELIVERIES CAN TAKE PLACE AND IF ANY OVERTIME WORK IS REQUIRED. (IE. WEEKEND AND NIGHTSHIFT WORK)

- SHOPFITTER TO SURVEY AND CONFIRM ALL DIMENSIONS ON SITE PRIOR TO COMMENCEMENT OF MANUFACTURE.
- SHOPFITTER TO ENSURE STRUCTUAL STABILITY OF ALL ITEMS MANUFACTURED

SPECIFICATIONS:
BENCH CARCASS & UP&OVER TOP:
- 16mm CHIPBOARD WITH MELAWOOD ALEGRIA TO ALL EXPOSED FACES. ALL EXPOSED EDGES TO RECEIVE MATCHING PVC EDGING STRIP.
- JOINTS AS PER DRAWING.
- CORNERS TO HAVE MITRE JOINTS
- SHOPFITTER TO ADVISE ON SUBSTRUCTURE REQUIRED FOR STRUCTURAL STABILITY

INTERNAL CARCASS CABINETRY:
- 16mm WHITE MELAMINE

DRAWER:
- 16mm CHIPBOARD WITH MELAWOOD ALGERIA TO ALL EXPOSED FACES. TO HAVE MATCHING EDGE. HANDLE TO BE FIXED AS PER DETAILING.
- SOFT CLOSE RUNNERS TO BE INSTALLED

CUPBOARD DOOR:
- 16mm CHIPBOARD WITH MELAWOOD FOLKSTONE GREY TO ALL EXPOSED FACES. TO HAVE MATCHING EDGE. HANDLE TO BE FIXED AS PER DETAILING.
- SOFT CLOSE HINGES TO BE INSTALLED

BENCH SEAT
- SEAT TO BE MADE UP OF 40mm HIGH DENSITY FOAM WITH SIDE BORDERS AND AN ADDITIONAL 10MM DACRON BATTING FABRIC FOR SOFTENING.
- TO BE FIXED TO BASE WITH VELCRO
- FABRIC SPECIFICATION SEAT & BACKREST: WEAVERS WORLD TWEED DURHAM
- FABRIC TO BE APPROVED BY CLIENT PRIOR TO MANUFACTURE

SKIRTING:
-75mm HIGH ANODISED ALUMINIUM. COLOUR: BLACK

HANDLE SPECIFICATION:
ASHTON HANDLE
COLOUR: BLACK
SIZE: 205L X 30H X 7W mm - HOLE CENTRES: 192mm
SUPPLIER: GELMAR

REFER TO TYPICAL DETAILING FOR HANDLE POSITIONING: DWG NO. 700.02

GENERAL NOTES

1. COPYRIGHT
1.1 Copyright exists in terms of the Copyright Act, Act No. 98 of 1978
1.2 Copyright in these drawings and in the designs which they depict vests in MHSC. Any unauthorised copying of the drawing or use of the design constitutes infringement of copyright and is a criminal offence.
1.3 In addition to criminal prosecution, the owner is entitled to sue for damages and claim delivery of the infringing copies.
1.4 Copyright infringement includes the sale or distribution of the copy and 'COPY' includes the adaptation thereof.

2. DRAWINGS
- Shop drawings must be approved by the designer prior to the manufacture of any shopfitting or furniture items.
- Detail drawings must be preferred to arrangement drawings.
- One set of drawings are to be kept on site at all times.
- All superseded drawings are to be clearly marked 'SUPERSEDED' and a copy of the supreseded drawing is to be handed to the contractor.

3. DIMENSIONS
- Contractors and subcontractors are to check and verify dimensions and detail levels before commencing with work.
- Figured dimensions are to be taken in preference to scaled dimensions.

4. VARIATIONS AND AMENDMENTS
- The designer is to be notified of any variation by the Project Manager.
- All relevant detail, levels and dimensions of any work done, must be checked on site by all contractors. Any discrepencies are to be reported to the relevant designer at 'Turnkey Interiors' immediately

5. CONTRACTORS, SUBCONTRACTORS AND ARTISANS
- Contractors must ensure the structural stability of all components of their work and ascertain that the main structure is capable of supporting all loads applied thereto.
- All electrical and drainge work is to be executed by the registered artisans.

6. SHOPFITTED ITEMS
Shopfitted items ae to be measured on site and shop drawings are to be approved by the relevant designer and client PRIOR to material order and manufacture.

7. PARTITIONS
- All paritions on outside walls are set out from center lines of columns or window mullions. any dimensional errors should be accomodated within these parameters.
- All partitions to be rodent proofed and have a miniumum of 30 minute fire rating

ISSUED
2025.07.25
TENDER DWG ONLY

REVISION SCHEDULE

NO	DESCRIPTION	DATE
A	ISSUED FOR COSTING	2025.07.23
B	ISSUED FOR TENDER	2025.07.25

REFER TO ALL RELEVANT LAYOUTS
BEFORE COSTING AND CONSTRUCTION

MHSC
Mine Health and Safety Council

APPROVAL SIGNATURES: APPROVAL DATE:	A2
DATE DRAWN:	DRAWN BY/CHECKED BY KK
PROJECT No. MHSC	SCALE As indicated

MHSC OFFICE RENOVATION

DRAWING TITLE:
SICK BAY BED

DWG No. 700.J02 | B

ISSUED FOR: **TENDER**